THE PROPERTY OF THE DRAWING IS ESTABILISHED BY LAW. IT IS FORBIDDEN TO PRODUCE OR SHOW IT TO THIRD PART. WITHOUT A WRITTEN AGREEMENT.

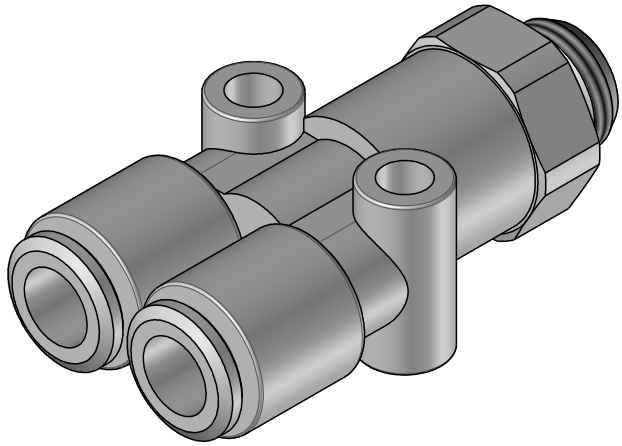

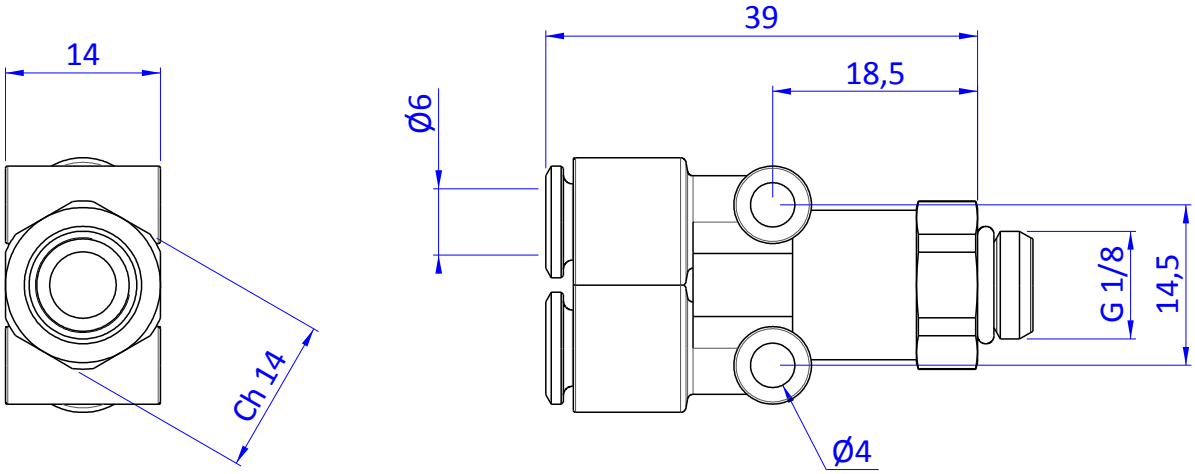

Format A4 UNI 936-76	FPS FPSERVICES AUTOMATION	DESIGNED FROM FPS Automation	REVIEW A
	GENERAL TOLERANCE UNI - ISO 2768 CLASSE f	DESCRIPTION CA.12.05.051	DATE 06/08/2016
			WEIGHT 0.015Kg
			CODE CA.12.05.051